DAIWA

SPINNING REEL

LEGALIS LT 1000/1000-XH/2000/2000-XH/2500/2500-XH/3000-C/3000-CXH/4000-C/4000-CXH/4000-CP/5000-C/5000-CXH/6000/6000-H PARTS LIST

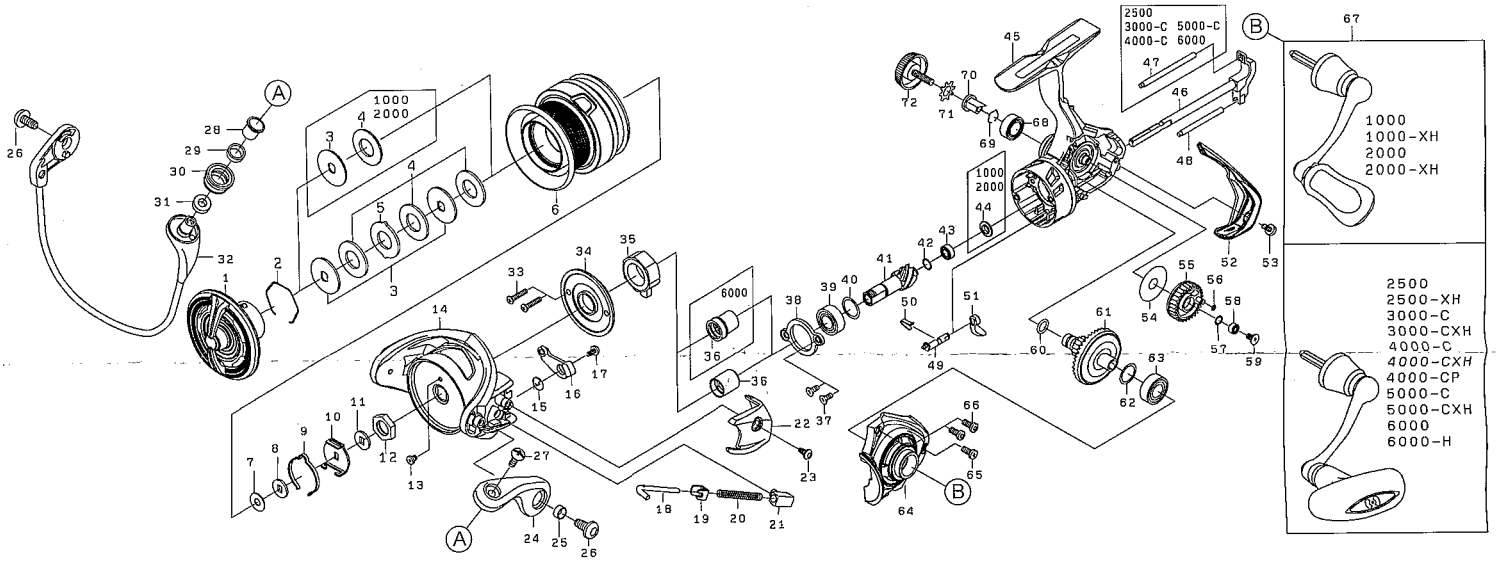

*Please order by parts number, not key number.

LEGALIS LT 1000/1000-XH/2000/2000-XH/2500/2500-XH/3000-C/3000-CXH/4000-C/4000-CXH/4000-CP/5000-C/5000-CXH/6000/6000-H

Key No.	Parts Name	Parts No.														
		1000	1000-XH	2000	2000-XH	2500	2500-XH	3000-C	3000-CXH	4000-C	4000-CXH	4000-CP	5000-C	5000-CXH	6000	6000-H
1	Drag Knob	6Q376801	6Q376801	6Q376801	6Q376801	6Q346201	6Q346201	6Q346201	6Q346201	6Q352901	6Q352901	6Q352901	6Q352901	6Q352901	6Q364201	6Q364201
2	Drag Washer Retainer	6Q346101	6Q346101	6Q346101	6Q346101	6Q346101	6Q346101	6Q346101	6Q346101	6Q346101	6Q346101	6Q346101	6Q346101	6Q346101	61704101	61704101
3	Key Washer	6Q621901	6Q621901	6Q621901	6Q621901	6Q621901	6Q621901	6Q621901	6Q621901	6Q621901	6Q621901	6Q621901	6Q621901	6Q621901	6J577501	6J577501
4	Drag Washer	6J678901	6J678901	6J678901	6J678901	6J678801	6J678801	6J678801	6J678801	6J678801	6J678801	6J678801	6J678801	6J678801	6J679001	6J679001
5	Eared Washer	—	—	—	—	6Q346001	6Q346001	6Q346001	6Q346001	6Q346001	6Q346001	6Q346001	6Q346001	6Q346001	6Q377601	6Q377601
2~6	Spool Assembly	6Q717401	6Q676701	6Q717601	6Q677001	6Q717801	6Q677501	6Q718001	6Q678001	6Q718201	6Q678501	6Q678901	6Q718401	6Q679401	6Q718601	6Q679901
7	Washer (A)	6E398000	6E398000	6E398000	6E398000	6E398000	6E398000	6E398000	6E398000	6E398000	6E398000	6E398000	6E398000	6E398000	6F050100	6F050100
8	Washer (B)	6Q348502	6Q348502	6Q348502	6Q348502	6Q348502	6Q348502	6Q348502	6Q348502	6Q348502	6Q348502	6Q348502	6Q348502	6Q348502	6Q363801	6Q363801
9	Spool Click Leaf Spring	6Q797701	6Q797701	6Q797701	6Q797701	6Q797701	6Q797701	6Q797701	6Q797701	6Q797701	6Q797701	6Q797701	6Q797701	6Q797701	6Q797701	6Q797701
10	Click Leaf Spring Holder	6Q798201	6Q798201	6Q798201	6Q798201	6Q798201	6Q798201	6Q798201	6Q798201	6Q798201	6Q798201	6Q798201	6Q798201	6Q798201	6Q798301	6Q798301
11	Washer (C)	6Q344001	6Q344001	6Q344001	6Q344001	6Q344001	6Q344001	6Q344001	6Q344001	6Q344001	6Q344001	6Q344001	6Q344001	6Q344001	6Q377501	6Q377501
12	Rotor Nut	6Q122401	6Q122401	6Q122401	6Q122401	6Q122401	6Q122401	6Q122401	6Q122401	6Q122401	6Q122401	6Q122401	6Q122401	6Q122401	6Q135201	6Q135201
13	Screw (A)	6H022701	6H022701	6H022701	6H022701	6H022701	6H022701	6H022701	6H022701	6H022701	6H022701	6H022701	6H022701	6H022701	6H022701	6H022701
14	Rotor	6Q139548	6Q139548	6Q139548	6Q139548	6Q343035	6Q343035	6Q120544	6Q120544	6Q351830	6Q351830	6Q351830	6Q129235	6Q129235	6Q134536	6Q134536
15	Bail Trip Lever Spring	6H443301	6H443301	6H443301	6H443301	6H413601	6H413601	6H413601	6H413601	6H413601	6H413601	6H413601	6H413601	6H413601	6H413601	6H413601
16	Bail Trip Lever	6Q139601	6Q139601	6Q139601	6Q139601	6Q343101	6Q343101	6Q120701	6Q120701	6Q351901	6Q351901	6Q351901	6Q129301	6Q129301	6Q134601	6Q134601
17	Screw (B)	6H417701	6H417701	6H417701	6H417701	6H417701	6H417701	6H417701	6H417701	6H417701	6H417701	6H417701	6H417701	6H417701	6H417701	6H417701
18	Bail Spring Shaft	6Q139801	6Q139801	6Q139801	6Q139801	6Q343301	6Q343301	6Q121201	6Q121201	6Q129501	6Q129501	6Q129501	6Q129501	6Q129501	6Q134801	6Q134801
19	Bail Spring Plate	6H576101	6H576101	6H576101	6H576101	6H576101	6H576101	6H576101	6H576101	6H576101	6H576101	6H576101	6H576101	6H576101	6H576101	6H576101
20	Bail Spring	6H442401	6H442401	6H442401	6H442401	6J642801	6J642801	6H545701	6H545701	6H414201	6H414201	6H414201	6H414201	6H414201	6H640701	6H640701
21	Bail Spring Holder	6Q121501	6Q121501	6Q121501	6Q121501	6Q121501	6Q121501	6Q121501	6Q121501	6Q121501	6Q121501	6Q121501	6Q121501	6Q121501	6Q121501	6Q121501
22	Cover (A)	6Q146501	6Q146501	6Q146501	6Q146501	6Q343501	6Q343501	6Q121801	6Q121801	6Q352101	6Q352101	6Q352101	6Q129601	6Q129601	6Q134901	6Q134901
23	Screw (C)	6Q342901	6Q342901	6Q342901	6Q342901	6Q342901	6Q342901	6Q342901	6Q342901	6Q342901	6Q342901	6Q342901	6Q342901	6Q342901	6Q342901	6Q342901
24	Bail Arm	6Q121607	6Q121607	6Q121607	6Q121607	6Q121607	6Q121607	6Q121607	6Q121607	6Q121607	6Q121607	6Q121607	6Q121607	6Q121607	6Q121607	6Q121607
25	Collar (A)	6Q121701	6Q121701	6Q121701	6Q121701	6Q121701	6Q121701	6Q121701	6Q121701	6Q121701	6Q121701	6Q121701	6Q121701	6Q121701	6Q121701	6Q121701
26	Screw (D)	6Q343401	6Q343401	6Q343401	6Q343401	6Q343401	6Q343401	6Q343401	6Q343401	6Q343401	6Q343401	6Q343401	6Q343401	6Q343401	6Q343401	6Q343401
27	Screw (E)	6Q195602	6Q195602	6Q195602	6Q195602	6Q195602	6Q195602	6Q195602	6Q195602	6Q195602	6Q195602	6Q195602	6Q195602	6Q195602	6Q195602	6Q195602
28	Collar (B)	6Q195501	6Q195501	6Q195501	6Q195501	6Q195501	6Q195501	6Q195501	6Q195501	6Q195501	6Q195501	6Q195501	6Q195501	6Q195501	6Q195501	6Q195501
29	Collar (C)	6Q220701	6Q220701	6Q220701	6Q220701	6Q220701	6Q220701	6Q220701	6Q220701	6Q220701	6Q220701	6Q220701	6Q220701	6Q220701	6Q220701	6Q220701
30	Line Roller	6J089901	6J089901	6J089901	6J089901	6J089901	6J089901	6J089901	6J089901	6J089901	6J089901	6J089901	6J089901	6J089901	6J089901	6J089901
31	Collar (D)	6Q203401	6Q203401	6Q203401	6Q203401	6Q203401	6Q203401	6Q203401	6Q203401	6Q203401	6Q203401	6Q203401	6Q203401	6Q203401	6Q203401	6Q203401
32	Bail Assembly	6Q788301	6Q788301	6Q788301	6Q788301	6Q777001	6Q777001	6Q777101	6Q777101	6Q777201	6Q777201	6Q777201	6Q777301	6Q777301	6Q135001	6Q135001
33	Screw (F)	6G837101	6G837101	6G837101	6G837101	6G837101	6G837101	6G837101	6G837101	6G837101	6G837101	6G837101	6G837101	6G837101	6G837101	6G837101
34	Cap	6Q139401	6Q139401	6Q139401	6Q139401	6Q139401	6Q139401	6Q120101	6Q120101	6Q129001	6Q129001	6Q129001	6Q129001	6Q129001	6Q134301	6Q134301
35	Roller Clutch	6Q308301	6Q308301	6Q308301	6Q308301	6Q308301	6Q308301	6J388401	6J388401	6J388401	6J388401	6J388401	6J388401	6J388401	6J309101	6J309101
36	Spacing Sleeve	6J001401	6J001401	6J001401	6J001401	6J001401	6J001401	6J001403	6J001403	6J001403	6J001403	6J001403	6J001403	6J001403	6J690501	6J690501
37	Screw (G)	6Q126201	6Q126201	6Q126201	6Q126201	6Q126201	6Q126201	6Q126201	6Q126201	6Q126201	6Q126201	6Q126201	6Q126201	6Q126201	6Q195701	6Q195701
38	Bearing Retainer (A)	6Q195601	6Q195601	6Q195601	6Q195601	6Q195601	6Q195601	6Q195601	6Q195601	6Q195601	6Q195601	6Q195601	6Q195601	6Q195601	6Q205901	6Q205901
39	Ball Bearing (A)	6G467302	6G467302	6G467302	6G467302	6G467302	6G467302	6G467302	6G467302	6G535104	6G535104	6G535104	6G535104	6G535104	6G354801	6G354801
40	Washer (D)	63758500	63758500	63758500	63758500	63758500	63758500	63758500	63758500	63758500	63758500	63758500	63758500	63758500	63712800	63712800
41	Pinion Gear	6Q375701	6Q409201	6Q375701	6Q409201	6Q341701	6Q360301	6Q341701	6Q360301	6Q351201	6Q367501	6Q678801	6Q351201	6Q367501	6Q405001	6Q366401
42	Spring Washer	6H931701	6H931701	6H931701	6H931701	6H931701	6H931701	6H931701	6H931701	6H931701	6H931701	6H931701	6H931701	6H931701	6G572501	6G572501
43	Ball Bearing (B)	6H959601	6H959601	6H959601	6H959601	6H959601	6H959601	6H959601	6H959601	6G466202	6G466202	6G466202	6G466202	6G466202	6G467108	6G467108
44	Collar (E)	6J387701	6J387701	6J387701	6J387701	—	—	—	—	—	—	—	—	—	—	—
45	Body	6Q676501	6Q676501	6Q676501	6Q676501	6Q677301	6Q677301	6Q677801	6Q677801	6Q678301	6Q678301	6Q678301	6Q678301	6Q678301	6Q679701	6Q679701
46	Main Shaft	6Q375301	6Q375301	6Q375301	6Q375301	6Q341501	6Q341501	6Q461401	6Q461401	6Q351001	6Q351001	6Q351001	6Q351001	6Q351001	6Q362601	6Q362601
47	Stabilizer Bar (A)	—	—	—	—	6Q126301	6Q126301	6Q126301	6Q126301	6Q126302	6Q126302	6Q126302	6Q126302	6Q126302	6Q126303	6Q126303
48	Stabilizer Bar (B)	6Q119104	6Q119104	6Q119104	6Q119104	6Q119101	6Q119101	6Q119101	6Q119101	6Q119102	6Q119102	6Q119102	6Q119102	6Q119102	6Q119103	6Q119103
49	Anti-Reverse Cam	6Q118101	6Q118101	6Q118101	6Q118101	6Q118101	6Q118101	6Q118101	6Q118101	6Q118101	6Q118101	6Q118101	6Q118101	6Q118101	6Q133401	6Q133401
50	Anti-Reverse Cam Spring	6H697801	6H697801	6H697801	6H697801	6H697801	6H697801	6H697801	6H697801	6H697801	6H697801	6H697801	6H697801	6H697801	6H697801	6H697801
51	Anti-Reverse Lever	6Q118001	6Q118001	6Q118001	6Q118001	6Q118001	6Q118001	6Q118001	6Q118001	6Q118001	6Q118001	6Q118001	6Q118001	6Q118001	6Q118001	6Q118001
52	Rear Cover	6Q626501	6Q626501	6Q626501	6Q626501	6Q626401	6Q626401	6Q626401	6Q626401	6Q674801	6Q674801	6Q674801	6Q674801	6Q674801	6Q675901	6Q675901
53	Screw (H)	6Q342901	6Q342901	6Q342901	6Q342901	6Q342901	6Q342901	6Q342901	6Q342901	6Q342901	6Q342901	6Q342901	6Q342901	6Q342901	6Q342901	6Q342901
54	Washer (E)	6H607902	6H607902	6H607902	6H607902	6H595701	6H595701	6H595701	6H595701	6H595701	6H595701	6H595701	6H595701	6H595701	6G644201	6G644201
55	Oscillate Gear	6Q375201	6Q375201	6Q375201	6Q375201	6Q139001	6Q139001	6Q118401	6Q118401	6Q350901	6Q350901	6Q350901	6Q350901	6Q350901	6Q133501	6Q133501
56	"O"-Ring (A)	6H770601	6H770601	6H770601	6H770601	6H770601	6H770601	6H770601	6H770601	6G466001	6G466001	6G466001	6G466001	6G466001	6B853101	6B853101
57	Washer (F)	6H129200	6H129200	6H129200	6H129200	6H129200	6H129200	6H129200	6H129200	6H129200	6H129200	6H129200	6H129200	6H129200	6G522100	6G522100
58	Ball Bearing (C)	6G469005	6G469005	6G469005	6G469005	6G469005	6G469005	6G469005	6G469005	6G469005	6G469005	6G469005	6G469005	6G469005	6G467108	6G467108
59	Screw (I)	6Q126101	6Q126101	6Q126101	6Q126101	6Q126101	6Q126101	6Q126101	6Q126101	6Q126101	6Q126101	6Q126101	6Q126101	6Q126101	6H463401	6H463401
60	"O"-Ring (B)	6G670501	6G670501	6G670501	6G670501	6G670501	6G670501	6G670501	6G670501	6G670501	6G670501	6G670501	6G670501	6G670501	6G645301	6G645301
61	Drive Gear	6Q375901	6Q409401	6Q375901	6Q409401	6Q341901	6Q360501	6Q341901	6Q360501	6Q351401	6Q367701	6Q128701	6Q351401	6Q367701	6Q405101	6Q167403
62	Washer (G)	63758500	63758500	63758500	63758500	63758500	63758500	63758500	63758500	63758500	63758500	63758500	63758500	63758500	63737800	63737800
63	Ball Bearing (D)	6G467302	6G467302	6G467302	6G467302	6G467302	6G467302	6G467302	6G467302	6G467302	6G467302	6G467302	6G467302	6G467302	6B861705	6B861705
64	Side Cover	6Q676601	6Q676601	6Q676601	6Q676601	6Q677401	6Q677401	6Q677401	6Q677401	6Q678401	6Q678401	6Q678401	6Q678401	6Q678401	6Q679801	6Q679801
65	Screw (J)	6Q342701	6Q342701	6Q342701	6Q342701	6Q342701	6Q342701	6Q342701	6Q342701	6Q342701	6Q342701	6Q342701	6Q342701	6Q342701	6Q342701	6Q342701
66	Screw (K)	6Q342601	6Q342601	6Q342601	6Q342601	6Q342601	6Q342601	6Q342601	6Q342601	6Q342601	6Q342601	6Q342601	6Q342601	6Q342601	6Q342601	6Q342601
67	Handle Assembly	6Q403301	6Q403301	6Q403301	6Q403301	6Q386901	6Q386901	6Q386901	6Q386901	6Q480701	6Q480701	6Q480701	6Q480701	6Q480701	6Q480801	6Q480801
68	Ball Bearing (E)	6G522706	6G522706	6G522706	6G522706	6G522706	6G522706	6G522706	6G522706	6G522706	6G522706	6G522706	6G522706	6G522706	6G523405	6G523405
69	Bearing Retainer (B)	6G472401	6G472401	6G472401	6G472401	6G472401	6G472401	6G472401	6G472401	6G472401	6G472401	6G472401	6G472401	6G472401	6G525101	6G525101
70	Collar (F)	6F721001	6F721001	6F721001	6F721001	6F721001	6F721001	6F721001	6F721001	6F721001	6F721001	6F721001	6F721001	6F721001	6F721202	6F721202
71	Washer (H)	61608401	61608401	61608401	61608401	61608401	61608401	61608401	61608401	61608401	61608401	61608401	61608401	61608401	61608401	61608401
72	Handle Screw	6Q132401	6Q132401	6Q132401	6Q132401	6Q132401	6Q132401	6Q132401	6Q132401	6Q132401	6Q132401	6Q132401	6Q132401	6Q132401	6Q136101	6Q136101